Roamer 172SMART6 Technical Drawing

Dimensions subject to manufacturing variation. Products may vary from those illustrated. This drawing is subject to change without notice.

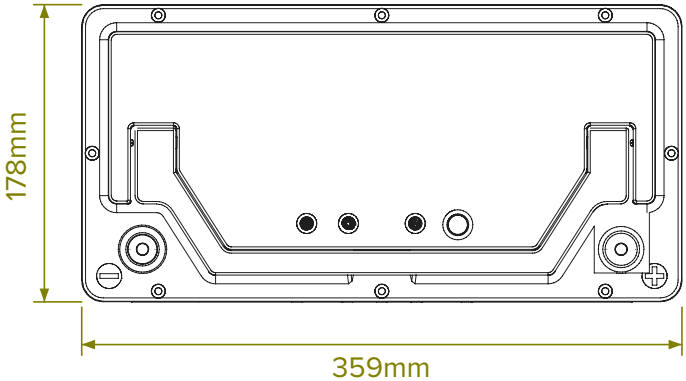

TOP VIEW

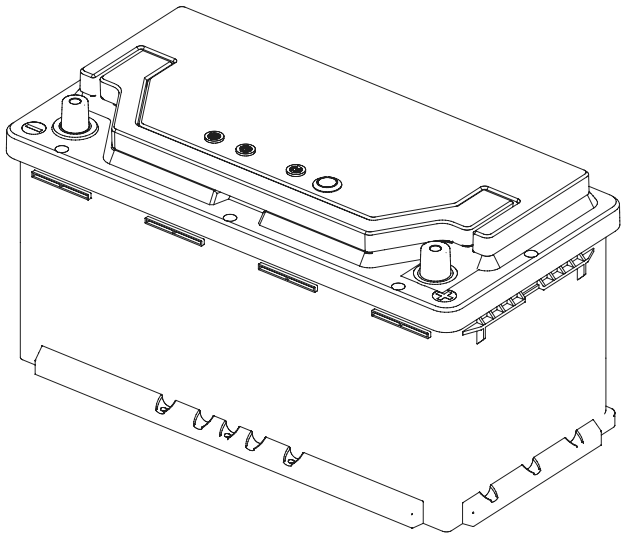

ISOMETRIC VIEW

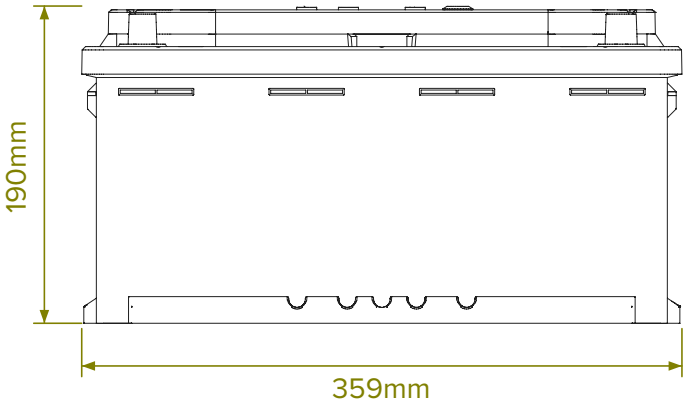

FRONT VIEW

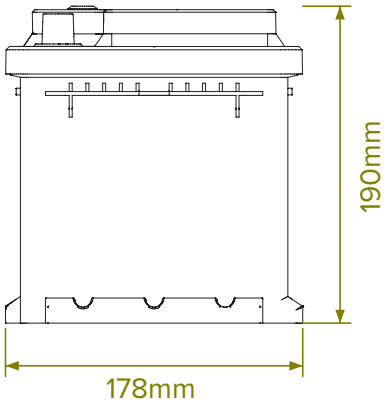

SIDE VIEW

Terminals: M8 Female and brass posts. Data ports: Link (8-pin), CAN/LIN (5-pin) and Remote (6-pin), M8 connectors. Drawing dimensions are taken from the manufacturer CAD model and exclude terminal bolts.