## Roamer 230SEATBASE6 Technical Drawing

Dimensions subject to manufacturing variation. Products may vary from those illustrated. This drawing is subject to change without notice.

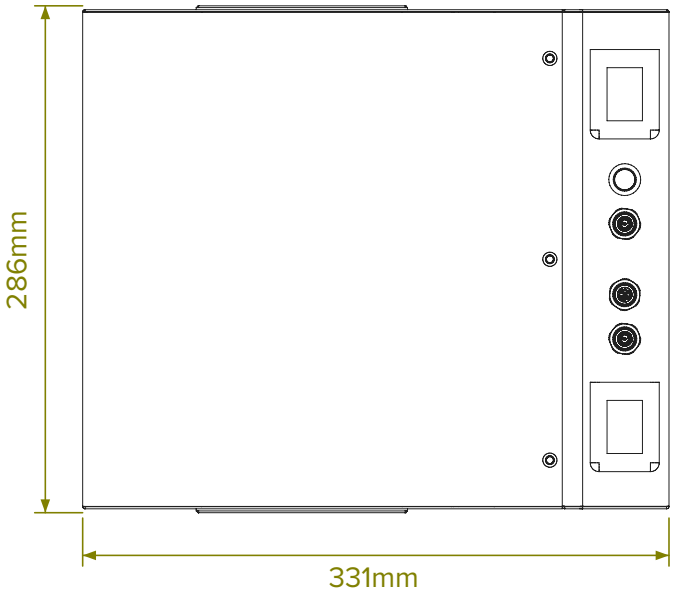


TOP VIEW

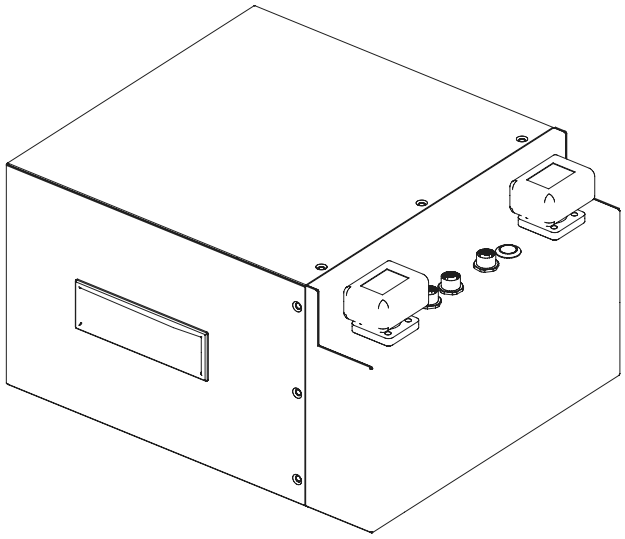

ISOMETRIC VIEW

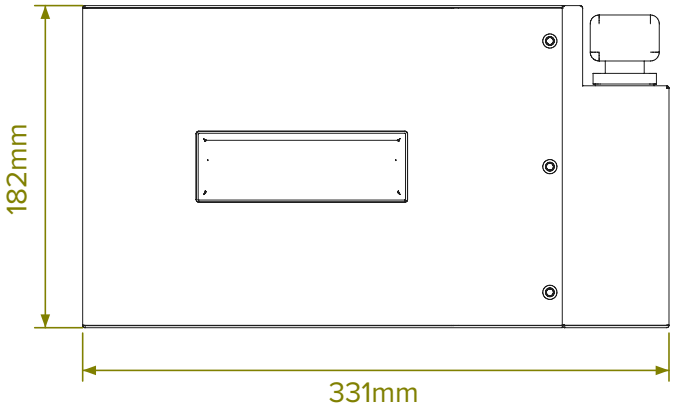


FRONT VIEW

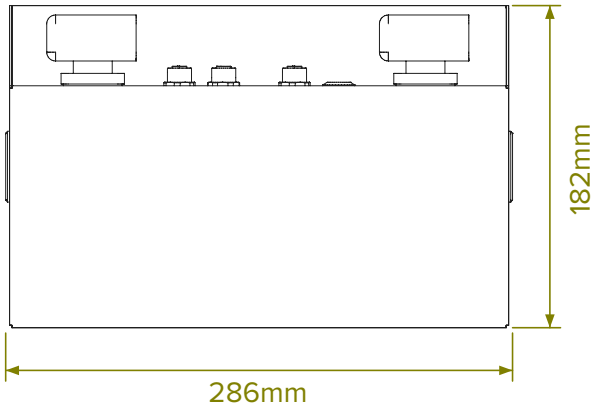


SIDE VIEW

Terminals: M8 Female. Data ports: Link (8-pin), CAN/LIN (5-pin) and Remote (6-pin), M12 connectors. Drawing dimensions are taken from the manufacturer CAD model and exclude terminal bolts.