Roamer 460SMART6

12.8V 460AH 300A LIFEPO4

The Roamer 460SMART6 is a typical rectangular Group 8D format battery with 460Ah capacity at 12V. Designed for large energy storage and high power applications but in a single battery, far exceeding energy storage capacities that are practically achievable using lead acid chemistries. For more information, visit www.roamer.com/products/460smart

General Description

All Roamer batteries utilise Lithium Iron Phosphate (LFP or LiFePO4) cell chemistry combined with an intelligent, Bluetooth connected Battery Management System (BMS) with an integrated 2A active balancer. Roamer only use Grade A cells direct from the manufacturer, matched at the factory to ensure coherent operation and maximise service life and safety. The batteries are constructed using precision engineered brackets, CNC-cut epoxy insulation board and high-capacity flexible copper busbars, and are fully serviceable so they can be repaired or upgraded to maximise the service life of the product.

Fire retardant materials including fibreglass resin panels and high-density carbon-impregnated EVA foam are used to provide high quality electrical and thermal insulation, and mechanical protection. This model is fitted with female M10 threaded terminals. All batteries have multi-layered safety features as standard including over and under voltage, over and under temperature for both charge and discharge, short circuit detection, cell balance monitoring and more. High specification components are used to provide passive protection from accidental extreme DC overvoltage, reverse polarity, and momentary overcurrent.

PRODUCT FEATURES

- 460Ah capacity at 12.8V (5.9kWh)
- Intelligent active cell balancing up to 2A
- Grade A Prismatic LFP cells
- Link (RS485), CAN/LIN and Remote power button data ports (M12)
- 12 year warranty
- Up to 300A continuous discharge (3.8kW), 300A recommended
- Supports up to 16 batteries in parallel for increased capacity, current delivery, or supply redundancy
- Discharge between -20 °C and 55 °C, charge between 0 °C and 55 °C
- Live data on Victron GX, Sargent, Truma, BCA, Garmin and other CAN displays
- Free Roamer SMART Bluetooth app for iOS and Android



Battery Dimensions

Dimensions subject to manufacturing variation. Products may vary from those illustrated. This drawing is subject to change without notice.

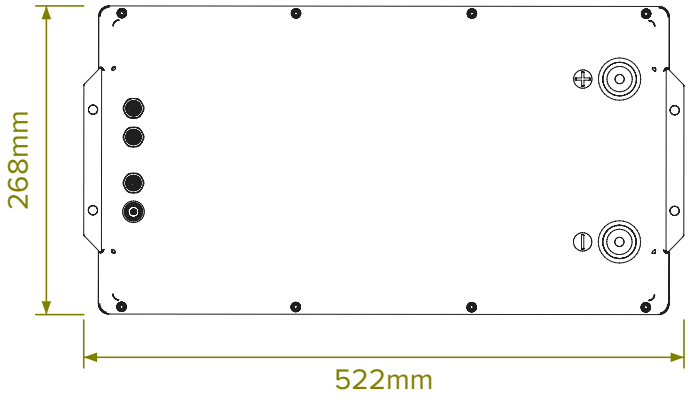

TOP VIEW

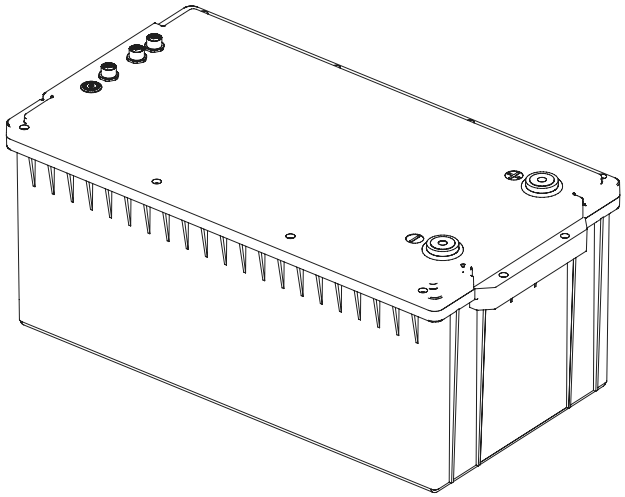

ISOMETRIC VIEW

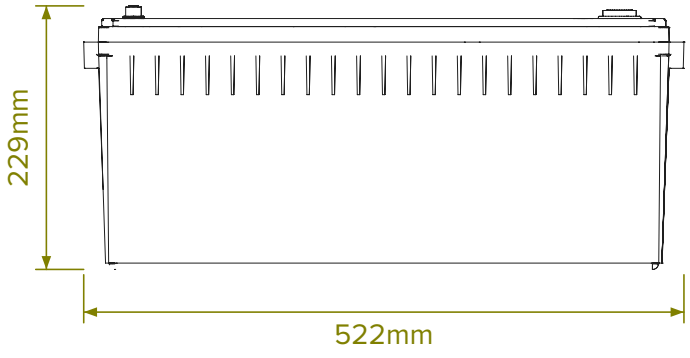

FRONT VIEW

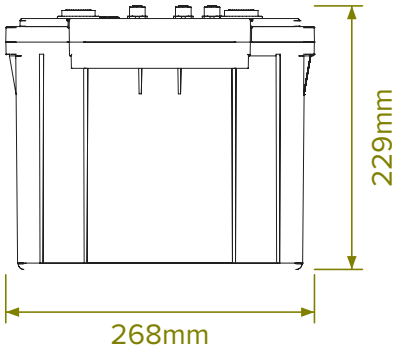

SIDE VIEW

Terminals: M10 Female. Data ports: Link (8-pin), CAN/LIN (5-pin) and Remote (6-pin), M12 connectors. Drawing dimensions are taken from the manufacturer CAD model and exclude terminal bolts.

Battery Specification

	Identifier	Min	Typical	Max	Unit
Nominal Voltage	V_N	-	12.8	-	V
Nominal Capacity	C_N	-	460	506	Ah
Energy Capacity	E_N	-	5888	-	Wh
Cell Chemistry	-	-	LFP	-	-
Cell Type	-	-	Prismatic	-	-
Cell Capacity	C_C	230	230	-	Ah
Cell Configuration	-	-	4S 2P	-	-
Pack Internal Resistance	R_I	-	-	20	mΩ
Parallel Limit	N_{PMAX}	-	-	16	-
Series Limit	N_{SMAX}	-	-	4*	-
Cycle Life at 80% DoD (25°C)	-	-	7000	-	-
Cycle Life at 100% DoD (25°C)	-	-	3500	-	-

*Series connection is possible but not recommended. Do not exceed 60V, and only connect batteries of the same capacity, age, brand and model. See the SMART6 user manual for details. Cycle life figures are averages from cell datasheets; slight variations due to testing methods.

Physical Specification

	Identifier	Min	Typical	Max	Unit
Length	L_L	-	522	-	mm
Width	L_W	-	270	-	mm
Height	L_H	-	228	-	mm
Mass	M	-	38	-	kg
Case Type	-	-	ABS Serviceable	-	-
Terminal Type	-	-	M10 Female	-	-
Terminal Torque Rating	T_{MAX}	15	16	17	Nm
IP Rating	-	-	IP54	-	-
Data Ports (Link, CAN/LIN, Remote)	-	-	M12	-	-
Fixing Kits Required (BATTFITTINGKIT)	-	-	2	-	-
Warranty	-	-	12	-	years

Charging Parameters

	Identifier	Min	Recommended	Max	Unit
Battery Safe Voltage	V_{BS}	10	-	14.6	V
Battery Working Voltage	V_{BW}	10.8	-	14.2	V
Nominal Cell Voltage	V_{CN}	2.8	-	3.7	V
Absorption Voltage	V_{CA}	-	14.2	14.6	V
Float Voltage	V_{CF}	-	Off or 13.5	-	V
Maintenance Voltage	V_{CS}	-	13.25	-	V
BMS Charge Current Limit	I_{C}	5	-	300	A
Recommended Max Charge Rate	R_{C}	-	-	230	A
Charge Temperature	T_{C}	0	-	55	°C
Charge Current >25°C	I_{CMAX25}	-	-	230	A
Charge Current @ 10°C	I_{CMAX10}	-	-	92	A
Charge Current @ 5°C	I_{CMAX5}	-	-	46	A
Charge Current < 0°C	I_{CMAX0}	-	-	0	A
Charge Current < -20°C	$I_{CMAX-20}$	-	-	0	A

Discharging Parameters

	Identifier	Min	Recommended	Max	Unit
BMS Peak Discharge Current (instantaneous)	I_{CP}	0	-	600	A
BMS Max Continuous Discharge Current	I_{CC}	0	-	300	A
Recommended Max Discharge Rate	R_{D}	-	-	300	A
Recommended Max Inverter Power	P_{INV}	-	-	3000	VA
Discharge Temperature	T_{D}	-20	-	55	°C

Storage Parameters

	Identifier	Min	Recommended	Max	Unit
Storage Temperature Limits	T_{SL}	-20	-	40	°C
Recommended Storage Temperature	T_{S}	10	-	35	°C
Recommended Storage SoC	S_{S}	40	-	80	%
Recommended Storage Voltage	V_{S}	13.0	-	13.25	V

Pre-charge your inverter on first connection (recommended for inverters above 1500VA). Always connect cables with the battery switched off, then switch the battery on last.
See the SMART6 user manual for full charging, discharging and storage guidance.

BMS Parameters

	Identifier	Min	Typical	Max	Unit
Cell Overcharge Detection Voltage	V_{COD}	-	3.70	-	V
Cell Overcharge Release Voltage	V_{COR}	-	3.4	-	V
Pack Overcharge Detection Current	I_{BOD}	-	300	-	A
Pack Overcharge Release Current	I_{BOR}	-	0	-	A
Overcharge Detection Time	t_{OD}	-	1	-	s
Cell Undercharge Detection Voltage	V_{CUD}	-	2.5	-	V
Cell Undercharge Release Voltage	V_{CUR}	-	2.7	-	V
Undercharge Detection Time	t_{UD}	-	1	-	s
Cell Balance Transfer Current (active)	I_{CB}	-	2	-	A
Cell Balance Trigger Delta Threshold Voltage	V_{CBD}	-	0.01	-	V
Short Circuit Detection Current	I_{SCD}	-	2200	-	A
Short Circuit Protection Release Current	I_{SCR}	-	5	-	A
Short Circuit Detection Time	t_{SC}	-	150	200	µs
Charge Temperature Protection	T_{CPD}	0	-	55	°C
Charge Temperature Protection Release	T_{CPR}	5	-	50	°C
Discharge Temperature Protection	T_{DP}	-20	-	55	°C
Discharge Temperature Protection Release	T_{DPR}	-15	-	50	°C
BMS Working Current Consumption	I_{WRK}	-	30	-	mA
BMS Standby Current Consumption	I_{STBY}	-	800	-	µA
Emergency Mode Override Duration	-	-	30	-	min
Sleep Mode (optional, off by default)	-	-	26h at <1A	-	-

The BMS parameters are configured at the factory to match the battery requirements exactly and should not be changed without speaking to Roamer first. Unauthorised changes may invalidate the battery warranty.

Battery Characteristics

The following graphs demonstrate the operational characteristics of LiFePo4 cells under a variety of conditions. Many factors play a role in the exact capacity, performance, lifetime and safety of a lithium battery so every installation varies depending on the exact setup and use case. These serve only as a guide and do not reflect the exact characteristics of any individual battery.

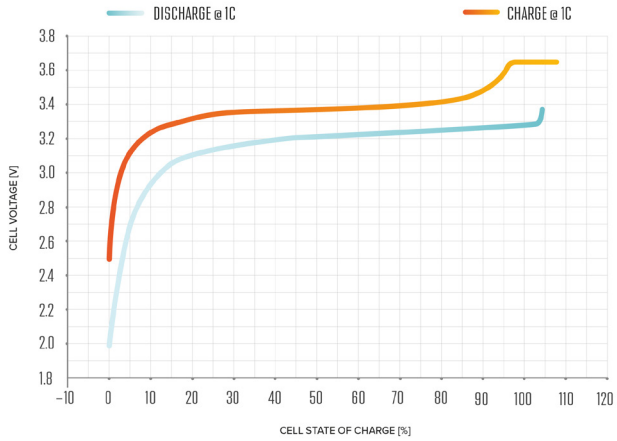

TYPICAL CHARGE & DISCHARGE VOLTAGE VS CHARGE STATE (SoC) CURVE OF A $LiFePO_4$ CELL (25 °C)

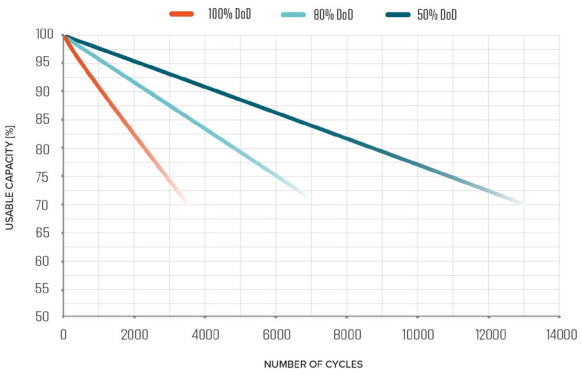

TYPICAL USABLE CAPACITY VS CYCLE LIFE FOR DIFFERENT DEPTHS OF DISCHARGE (0.5C, 25 °C)

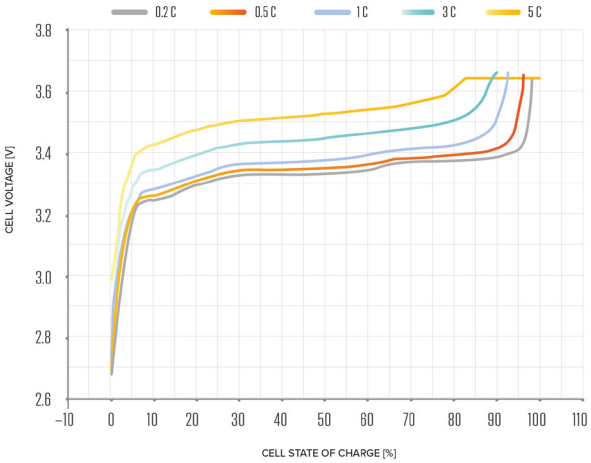

CELL VOLTAGE VS STATE OF CHARGE AT DIFFERENT CHARGE RATES (25 °C)

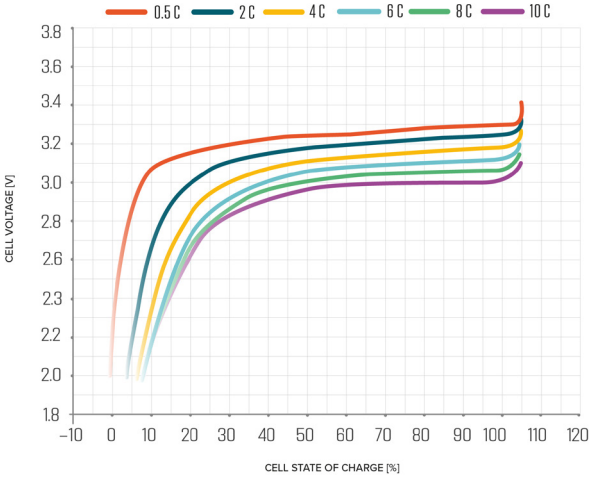

CELL VOLTAGE VS STATE OF CHARGE AT DIFFERENT DISCHARGE RATES (25 °C)

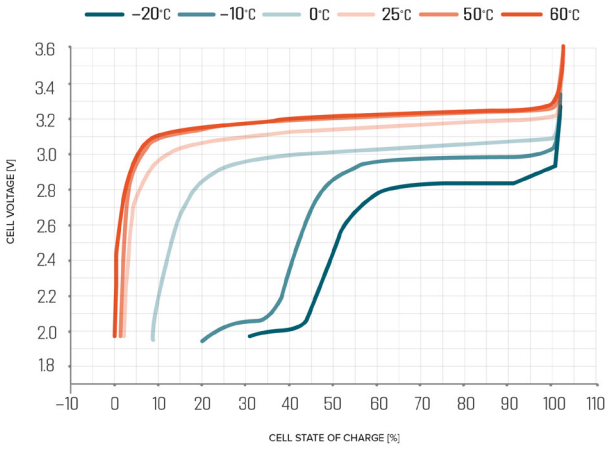

CELL VOLTAGE VS STATE OF CHARGE AT DIFFERENT TEMPERATURES

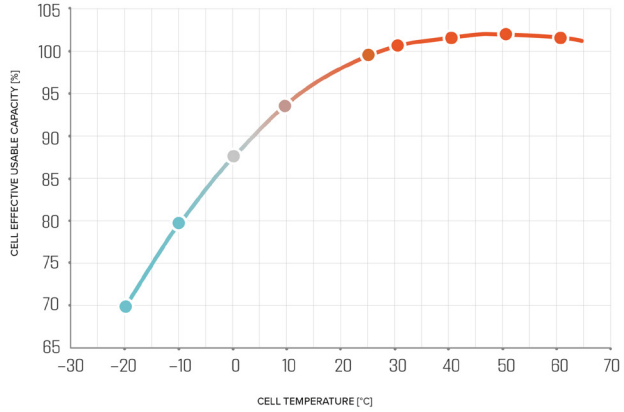

TYPICAL EFFECTIVE USABLE CAPACITY VS CELL TEMPERATURE

Document Information

Document Version	Release Date	Status	Change Notice
1.0	06/11/2026	Release	Initial issue for 460SMART6 (SMART6)

All efforts have been made to ensure the data in this datasheet are correct and up to date. Roamer Batteries constantly monitor product documentation for inaccuracy and routinely update documentation to reflect the most accurate information available. This version of the document supersedes and replaces all information supplied prior to the publication hereof, including all SMART5 datasheets for the equivalent model.

Roamer reserves the right to change the contents of this document without prior notice. Roamer, the Roamer Logo, and any other marks are trademarks of Roamer Batteries Ltd. or its subsidiaries. For more information, see Roamer.com. Other names and brands may be claimed as the property of others.
©2026 Roamer Batteries Ltd. All rights reserved. Products may vary slightly from those pictured.